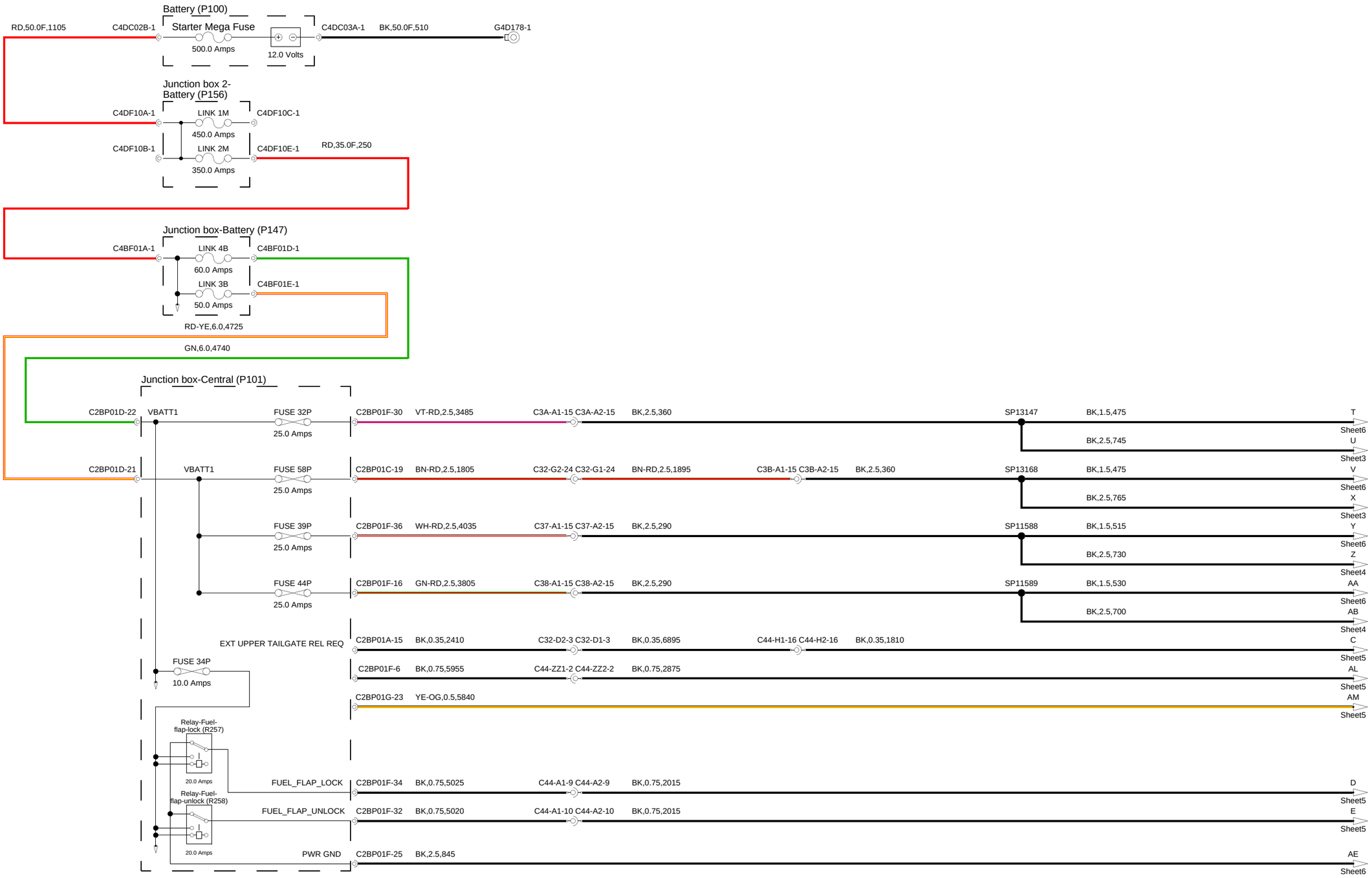
Battery (P100)
RD,50.0F,1105
C4DC02B-1
Starter Mega Fuse
500.0 Amps
12.0 Volts
C4DC03A-1
BK,50.0F,510
G4D178-1
Junction box 2-
Battery (P156)
C4DF10A-1
LINK 1M
450.0 Amps
C4DF10C-1
C4DF10B-1
LINK 2M
350.0 Amps
C4DF10E-1
RD,35.0F,250
Junction box-Battery (P147)
C4BF01A-1
LINK 4B
60.0 Amps
C4BF01D-1
LINK 3B
50.0 Amps
C4BF01E-1
RD-YE,6.0,4725
GN,6.0,4740
Junction box-Central (P101)
C2BP01D-22
VBATT1
FUSE 32P
25.0 Amps
C2BP01F-30
VT-RD,2.5,3485
C3A-A1-15 C3A-A2-15
BK,2.5,360
SP13147
BK,1.5,475
T
Sheet6
BK,2.5,745
U
Sheet3
C2BP01D-21
VBATT1
FUSE 58P
25.0 Amps
C2BP01C-19
BN-RD,2.5,1805
C32-G2-24 C32-G1-24
BN-RD,2.5,1895
C3B-A1-15 C3B-A2-15
BK,2.5,360
SP13168
BK,1.5,475
V
Sheet6
BK,2.5,765
X
Sheet3
FUSE 39P
25.0 Amps
C2BP01F-36
WH-RD,2.5,4035
C37-A1-15 C37-A2-15
BK,2.5,290
SP11588
BK,1.5,515
Y
Sheet6
BK,2.5,730
Z
Sheet4
FUSE 44P
25.0 Amps
C2BP01F-16
GN-RD,2.5,3805
C38-A1-15 C38-A2-15
BK,2.5,290
SP11589
BK,1.5,530
AA
Sheet6
BK,2.5,700
AB
Sheet4
EXT UPPER TAILGATE REL REQ
C2BP01A-15
BK,0.35,2410
C32-D2-3 C32-D1-3
BK,0.35,6895
C44-H1-16 C44-H2-16
BK,0.35,1810
C
Sheet5
FUSE 34P
10.0 Amps
C2BP01F-6
BK,0.75,5955
C44-ZZ1-2 C44-ZZ2-2
BK,0.75,2875
AL
Sheet5
C2BP01G-23
YE-OG,0.5,5840
AM
Sheet5
Relay-Fuel-
flap-lock (R257)
20.0 Amps
FUEL_FLAP_LOCK
C2BP01F-34
BK,0.75,5025
C44-A1-9 C44-A2-9
BK,0.75,2015
D
Sheet5
Relay-Fuel-
flap-unlock (R258)
FUEL_FLAP_UNLOCK
C2BP01F-32
BK,0.75,5020
C44-A1-10 C44-A2-10
BK,0.75,2015
E
Sheet5
20.0 Amps
PWR GND
C2BP01F-25
BK,2.5,845
AE
Sheet6

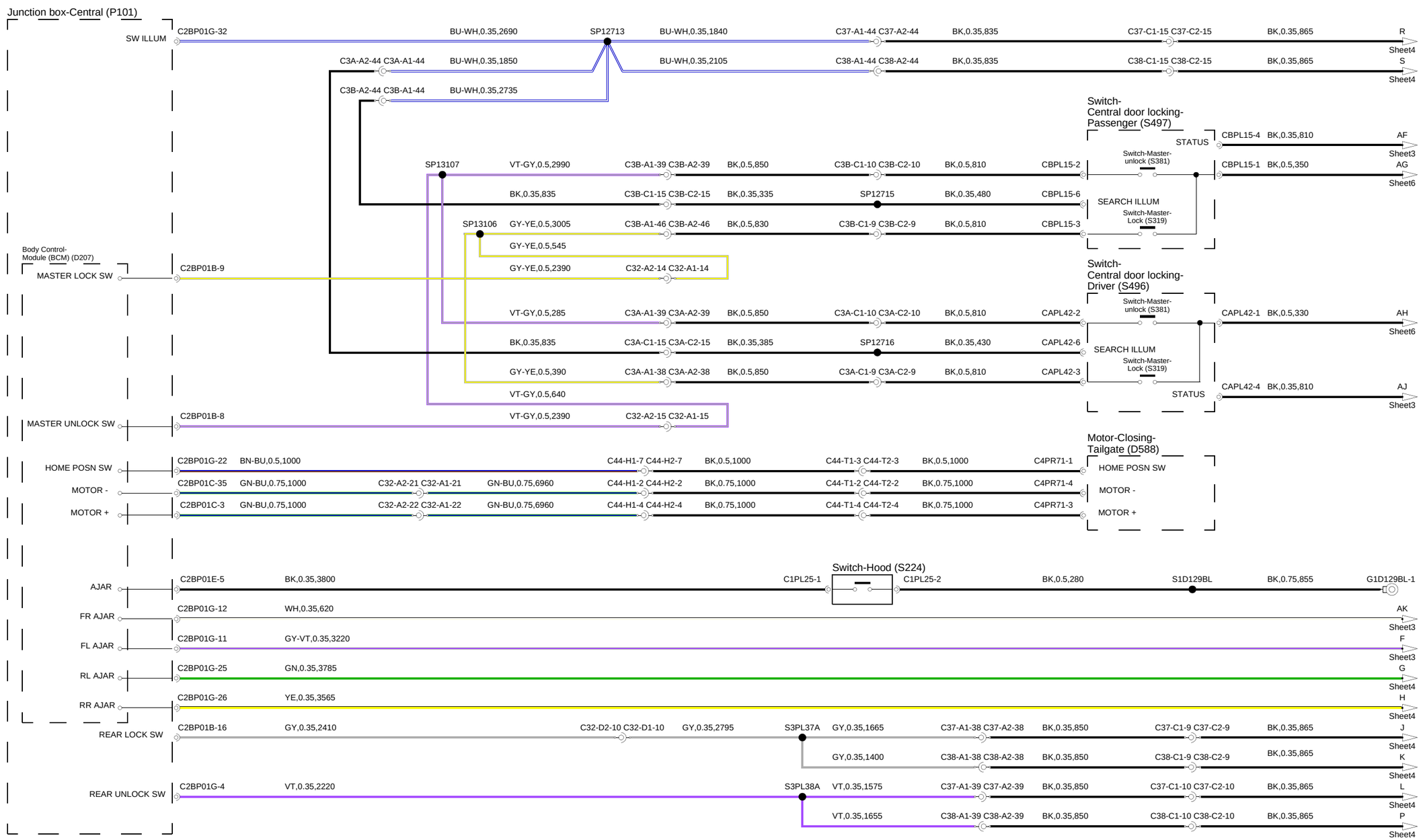
Junction box-Central (P101)
SW ILLUM
C2BP01G-32
BU-WH,0.35,2690
SP12713
BU-WH,0.35,1840
C37-A1-44 C37-A2-44
BK,0.35,835
C37-C1-15 C37-C2-15
BK,0.35,865
R
Sheet4
C3A-A2-44 C3A-A1-44
BU-WH,0.35,1850
BU-WH,0.35,2105
C38-A1-44 C38-A2-44
BK,0.35,835
C38-C1-15 C38-C2-15
BK,0.35,865
S
Sheet4
C3B-A2-44 C3B-A1-44
BU-WH,0.35,2735
Switch-
Central door locking-
Passenger (S497)
STATUS
CBPL15-4
BK,0.35,810
AF
Sheet3
Switch-Master-
unlock (S381)
SP13107
VT-GY,0.5,2990
C3B-A1-39 C3B-A2-39
BK,0.5,850
C3B-C1-10 C3B-C2-10
BK,0.5,810
CBPL15-2
CBPL15-1
BK,0.5,350
AG
Sheet6
BK,0.35,835
C3B-C1-15 C3B-C2-15
BK,0.35,335
SP12715
BK,0.35,480
CBPL15-6
SEARCH ILLUM
Switch-Master-
Lock (S319)
SP13106
GY-YE,0.5,3005
C3B-A1-46 C3B-A2-46
BK,0.5,830
C3B-C1-9 C3B-C2-9
BK,0.5,810
CBPL15-3
GY-YE,0.5,545
Body Control-
Module (BCM) (D207)
MASTER LOCK SW
C2BP01B-9
GY-YE,0.5,2390
C32-A2-14 C32-A1-14
Switch-
Central door locking-
Driver (S496)
Switch-Master-
unlock (S381)
VT-GY,0.5,285
C3A-A1-39 C3A-A2-39
BK,0.5,850
C3A-C1-10 C3A-C2-10
BK,0.5,810
CAPL42-2
CAPL42-1
BK,0.5,330
AH
Sheet6
BK,0.35,835
C3A-C1-15 C3A-C2-15
BK,0.35,385
SP12716
BK,0.35,430
CAPL42-6
SEARCH ILLUM
Switch-Master-
Lock (S319)
GY-YE,0.5,390
C3A-A1-38 C3A-A2-38
BK,0.5,850
C3A-C1-9 C3A-C2-9
BK,0.5,810
CAPL42-3
VT-GY,0.5,640
STATUS
CAPL42-4
BK,0.35,810
AJ
Sheet3
MASTER UNLOCK SW
C2BP01B-8
VT-GY,0.5,2390
C32-A2-15 C32-A1-15
Motor-Closing-
Tailgate (D588)
HOME POSN SW
C2BP01G-22
BN-BU,0.5,1000
C44-H1-7 C44-H2-7
BK,0.5,1000
C44-T1-3 C44-T2-3
BK,0.5,1000
C4PR71-1
HOME POSN SW
MOTOR -
C2BP01C-35
GN-BU,0.75,1000
C32-A2-21 C32-A1-21
GN-BU,0.75,6960
C44-H1-2 C44-H2-2
BK,0.75,1000
C44-T1-2 C44-T2-2
BK,0.75,1000
C4PR71-4
MOTOR -
MOTOR +
C2BP01C-3
GN-BU,0.75,1000
C32-A2-22 C32-A1-22
GN-BU,0.75,6960
C44-H1-4 C44-H2-4
BK,0.75,1000
C44-T1-4 C44-T2-4
BK,0.75,1000
C4PR71-3
MOTOR +
Switch-Hood (S224)
AJAR
C2BP01E-5
BK,0.35,3800
C1PL25-1
C1PL25-2
BK,0.5,280
S1D129BL
BK,0.75,855
G1D129BL-1
FR AJAR
C2BP01G-12
WH,0.35,620
AK
Sheet3
FL AJAR
C2BP01G-11
GY-VT,0.35,3220
F
Sheet3
RL AJAR
C2BP01G-25
GN,0.35,3785
G
Sheet4
RR AJAR
C2BP01G-26
YE,0.35,3565
H
Sheet4
REAR LOCK SW
C2BP01B-16
GY,0.35,2410
C32-D2-10 C32-D1-10
GY,0.35,2795
S3PL37A
GY,0.35,1665
C37-A1-38 C37-A2-38
BK,0.35,850
C37-C1-9 C37-C2-9
BK,0.35,865
J
Sheet4
GY,0.35,1400
C38-A1-38 C38-A2-38
BK,0.35,850
C38-C1-9 C38-C2-9
BK,0.35,865
K
Sheet4
REAR UNLOCK SW
C2BP01G-4
VT,0.35,2220
S3PL38A
VT,0.35,1575
C37-A1-39 C37-A2-39
BK,0.35,850
C37-C1-10 C37-C2-10
BK,0.35,865
L
Sheet4
VT,0.35,1655
C38-A1-39 C38-A2-39
BK,0.35,850
C38-C1-10 C38-C2-10
BK,0.35,865
P
Sheet4

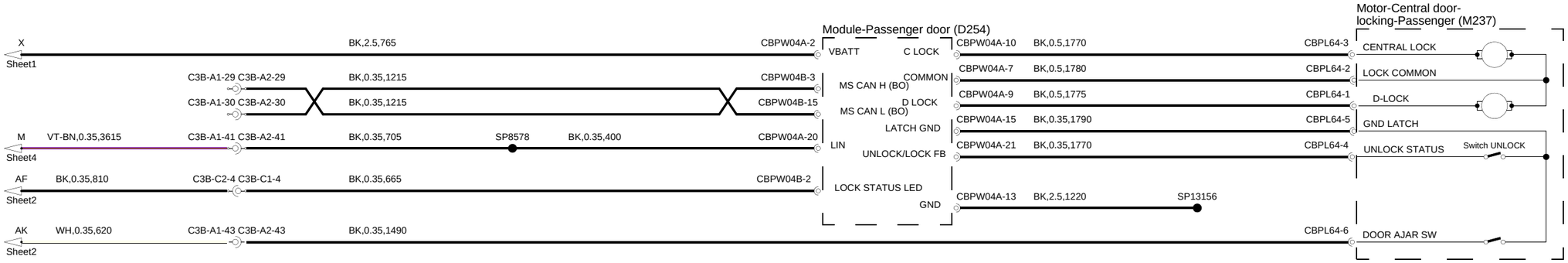
Module-Passenger door (D254)
Motor-Central door-locking-Passenger (M237)
X
Sheet1
BK,2.5,765
CBPW04A-2
VBATT
C LOCK
CBPW04A-10
BK,0.5,1770
CBPL64-3
CENTRAL LOCK
C3B-A1-29 C3B-A2-29
BK,0.35,1215
CBPW04B-3
COMMON
CBPW04A-7
BK,0.5,1780
CBPL64-2
LOCK COMMON
MS CAN H (BO)
C3B-A1-30 C3B-A2-30
BK,0.35,1215
CBPW04B-15
D LOCK
CBPW04A-9
BK,0.5,1775
CBPL64-1
D-LOCK
MS CAN L (BO)
LATCH GND
CBPW04A-15
BK,0.35,1790
CBPL64-5
GND LATCH
M
Sheet4
VT-BN,0.35,3615
C3B-A1-41 C3B-A2-41
BK,0.35,705
SP8578
BK,0.35,400
CBPW04A-20
LIN
UNLOCK/LOCK FB
CBPW04A-21
BK,0.35,1770
CBPL64-4
UNLOCK STATUS
Switch UNLOCK
AF
Sheet2
BK,0.35,810
C3B-C2-4 C3B-C1-4
BK,0.35,665
CBPW04B-2
LOCK STATUS LED
GND
CBPW04A-13
BK,2.5,1220
SP13156
AK
Sheet2
WH,0.35,620
C3B-A1-43 C3B-A2-43
BK,0.35,1490
CBPL64-6
DOOR AJAR SW

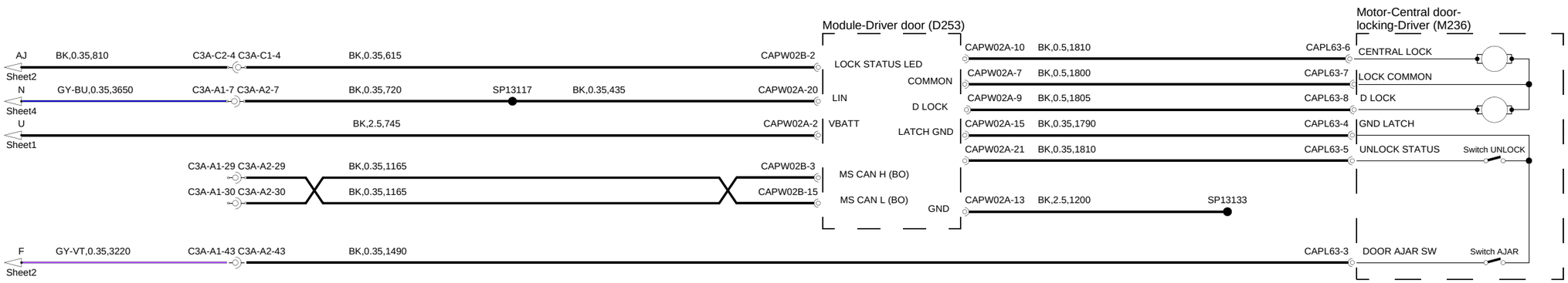
Module-Driver door (D253)
Motor-Central door-locking-Driver (M236)
AJ
Sheet2
BK,0.35,810
C3A-C2-4 C3A-C1-4
BK,0.35,615
CAPW02B-2
LOCK STATUS LED
CAPW02A-10
BK,0.5,1810
CAPL63-6
CENTRAL LOCK
COMMON
CAPW02A-7
BK,0.5,1800
CAPL63-7
LOCK COMMON
N
Sheet4
GY-BU,0.35,3650
C3A-A1-7 C3A-A2-7
BK,0.35,720
SP13117
BK,0.35,435
CAPW02A-20
LIN
D LOCK
CAPW02A-9
BK,0.5,1805
CAPL63-8
D LOCK
U
Sheet1
BK,2.5,745
CAPW02A-2
VBATT
LATCH GND
CAPW02A-15
BK,0.35,1790
CAPL63-4
GND LATCH
CAPW02A-21
BK,0.35,1810
CAPL63-5
UNLOCK STATUS
Switch UNLOCK
C3A-A1-29 C3A-A2-29
BK,0.35,1165
CAPW02B-3
MS CAN H (BO)
C3A-A1-30 C3A-A2-30
BK,0.35,1165
CAPW02B-15
MS CAN L (BO)
GND
CAPW02A-13
BK,2.5,1200
SP13133
F
Sheet2
GY-VT,0.35,3220
C3A-A1-43 C3A-A2-43
BK,0.35,1490
CAPL63-3
DOOR AJAR SW
Switch AJAR

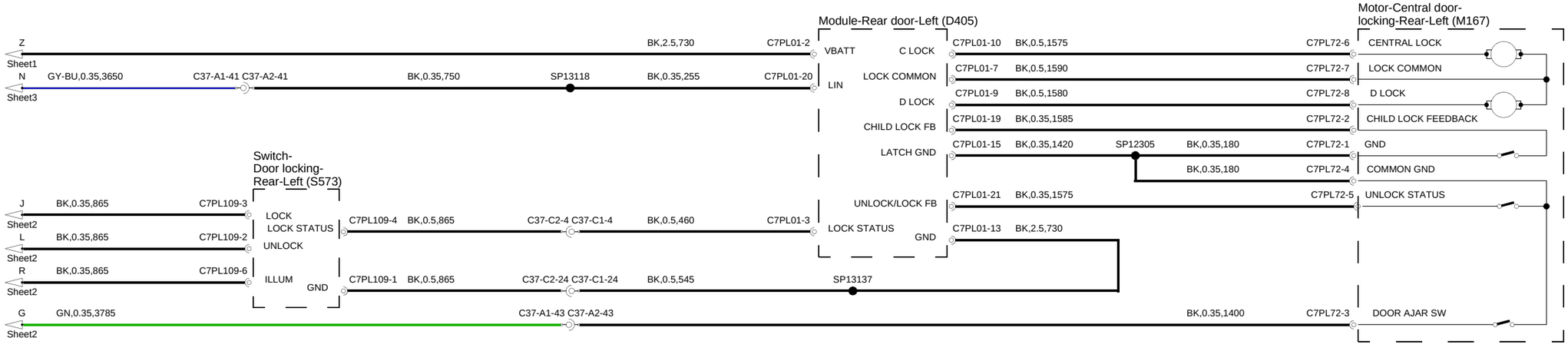
Module-Rear door-Left (D405)
Motor-Central door-locking-Rear-Left (M167)
Switch-Door locking-Rear-Left (S573)
Z
Sheet1
BK,2.5,730
C7PL01-2
VBATT
C LOCK
C7PL01-10
BK,0.5,1575
C7PL72-6
CENTRAL LOCK
N
Sheet3
GY-BU,0.35,3650
C37-A1-41 C37-A2-41
BK,0.35,750
SP13118
BK,0.35,255
C7PL01-20
LIN
LOCK COMMON
C7PL01-7
BK,0.5,1590
C7PL72-7
LOCK COMMON
D LOCK
C7PL01-9
BK,0.5,1580
C7PL72-8
D LOCK
CHILD LOCK FB
C7PL01-19
BK,0.35,1585
C7PL72-2
CHILD LOCK FEEDBACK
LATCH GND
C7PL01-15
BK,0.35,1420
SP12305
BK,0.35,180
C7PL72-1
GND
BK,0.35,180
C7PL72-4
COMMON GND
J
Sheet2
BK,0.35,865
C7PL109-3
LOCK
LOCK STATUS
C7PL109-4
BK,0.5,865
C37-C2-4 C37-C1-4
BK,0.5,460
C7PL01-3
LOCK STATUS
UNLOCK/LOCK FB
C7PL01-21
BK,0.35,1575
C7PL72-5
UNLOCK STATUS
L
Sheet2
BK,0.35,865
C7PL109-2
UNLOCK
GND
C7PL01-13
BK,2.5,730
R
Sheet2
BK,0.35,865
C7PL109-6
ILLUM
GND
C7PL109-1
BK,0.5,865
C37-C2-24 C37-C1-24
BK,0.5,545
SP13137
G
Sheet2
GN,0.35,3785
C37-A1-43 C37-A2-43
BK,0.35,1400
C7PL72-3
DOOR AJAR SW
Module-Rear door-Right (D406)
Motor-Central door locking-Rear-Right (M166)
Switch-Door locking-Rear-Right (S574)
AB
Sheet1
BK,2.5,700
C8PL01-2
VBATT
C LOCK
C8PL01-10
BK,0.5,1620
C8PL72-3
CENTRAL LOCK
M
Sheet3
VT-BN,0.35,3615
C38-A1-41 C38-A2-41
BK,0.35,750
SP8577
BK,0.35,275
C8PL01-20
LIN
LOCK COMMON
C8PL01-7
BK,0.5,1610
C8PL72-2
LOCK COMMON
D LOCK
C8PL01-9
BK,0.5,1615
C8PL72-1
D LOCK
CHILD LOCK FB
C8PL01-19
BK,0.35,1615
C8PL72-7
CHILD LOCK FEEDBACK
LATCH GND
C8PL01-15
BK,0.35,1420
SP12306
BK,0.35,180
C8PL72-8
CHIL LOCK GND
BK,0.35,180
C8PL72-5
GND
K
Sheet2
BK,0.35,865
C8PL110-3
LOCK
C8PL110-4
BK,0.35,865
C38-C2-4 C38-C1-4
BK,0.35,440
C8PL01-3
LOCK STATUS
UNLOCK/LOCK FB
C8PL01-21
BK,0.35,1620
C8PL72-4
UNLOCK STATUS
P
Sheet2
BK,0.35,865
C8PL110-2
UNLOCK
GND
C8PL01-13
BK,2.5,710
S
Sheet2
BK,0.35,865
C8PL110-6
ILLUM
GND
C8PL110-1
BK,0.35,865
C38-C2-24 C38-C1-24
BK,0.35,555
SP8473
H
Sheet2
YE,0.35,3565
C38-A1-43 C38-A2-43
BK,0.35,1415
C8PL72-6
DOOR AJAR SW

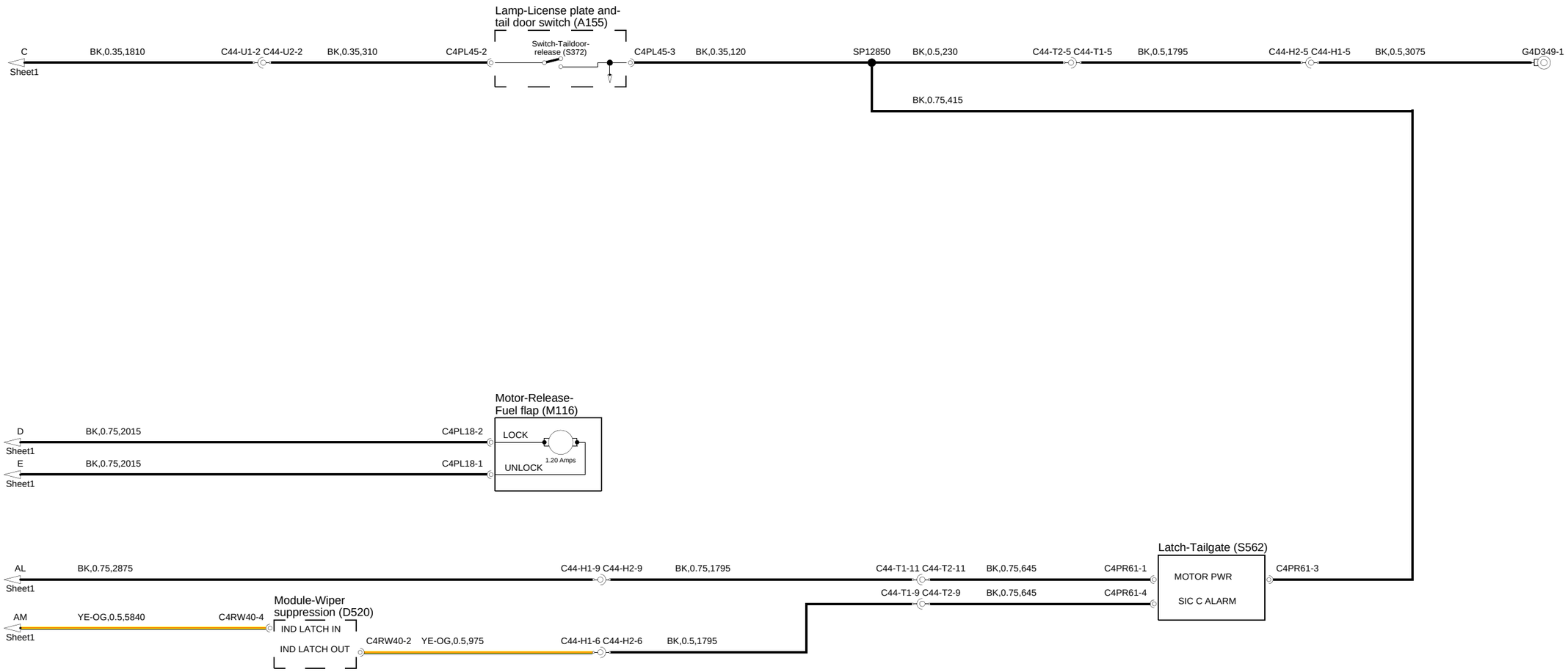
Lamp-License plate and-
tail door switch (A155)
C
Sheet1
BK,0.35,1810
C44-U1-2 C44-U2-2
BK,0.35,310
C4PL45-2
Switch-Taildoor-
release (S372)
C4PL45-3
BK,0.35,120
SP12850
BK,0.5,230
C44-T2-5 C44-T1-5
BK,0.5,1795
C44-H2-5 C44-H1-5
BK,0.5,3075
G4D349-1
BK,0.75,415
Motor-Release-
Fuel flap (M116)
D
Sheet1
BK,0.75,2015
C4PL18-2
LOCK
1.20 Amps
E
Sheet1
BK,0.75,2015
C4PL18-1
UNLOCK
Latch-Tailgate (S562)
AL
Sheet1
BK,0.75,2875
C44-H1-9 C44-H2-9
BK,0.75,1795
C44-T1-11 C44-T2-11
BK,0.75,645
C4PR61-1
MOTOR PWR
C4PR61-3
C44-T1-9 C44-T2-9
BK,0.75,645
C4PR61-4
SIC C ALARM
Module-Wiper
suppression (D520)
AM
Sheet1
YE-OG,0.5,5840
C4RW40-4
IND LATCH IN
IND LATCH OUT
C4RW40-2
YE-OG,0.5,975
C44-H1-6 C44-H2-6
BK,0.5,1795

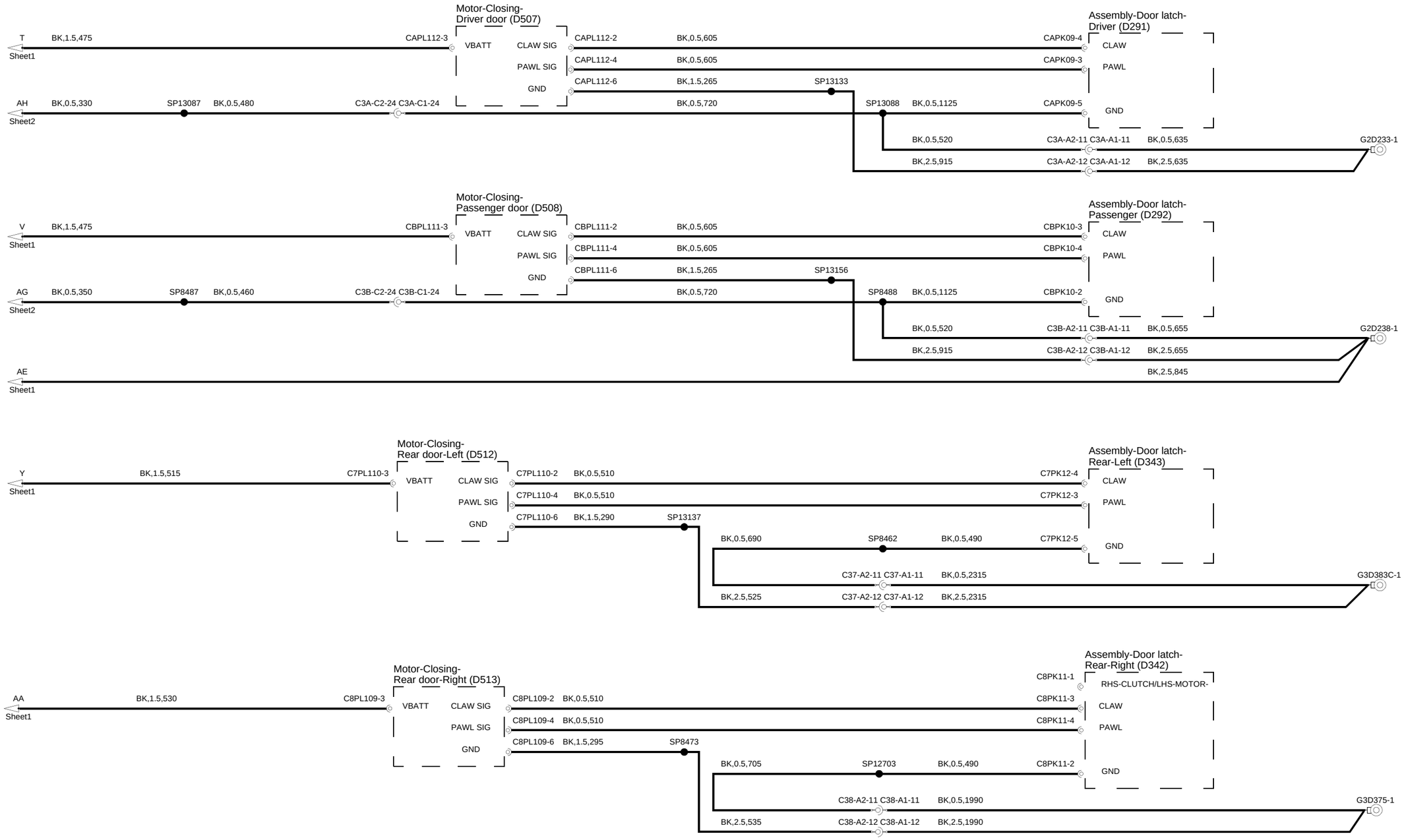
Motor-Closing-
Driver door (D507)
Assembly-Door latch-
Driver (D291)
T
BK,1.5,475
Sheet1
CAPL112-3
VBATT
CLAW SIG
CAPL112-2
BK,0.5,605
CAPK09-4
CLAW
PAWL SIG
CAPL112-4
BK,0.5,605
CAPK09-3
PAWL
GND
CAPL112-6
BK,1.5,265
SP13133
AH
BK,0.5,330
Sheet2
SP13087
BK,0.5,480
C3A-C2-24 C3A-C1-24
BK,0.5,720
SP13088
BK,0.5,1125
CAPK09-5
GND
BK,0.5,520
C3A-A2-11 C3A-A1-11
BK,0.5,635
G2D233-1
BK,2.5,915
C3A-A2-12 C3A-A1-12
BK,2.5,635
Motor-Closing-
Passenger door (D508)
Assembly-Door latch-
Passenger (D292)
V
BK,1.5,475
Sheet1
CBPL111-3
VBATT
CLAW SIG
CBPL111-2
BK,0.5,605
CBPK10-3
CLAW
PAWL SIG
CBPL111-4
BK,0.5,605
CBPK10-4
PAWL
GND
CBPL111-6
BK,1.5,265
SP13156
AG
BK,0.5,350
Sheet2
SP8487
BK,0.5,460
C3B-C2-24 C3B-C1-24
BK,0.5,720
SP8488
BK,0.5,1125
CBPK10-2
GND
BK,0.5,520
C3B-A2-11 C3B-A1-11
BK,0.5,655
G2D238-1
BK,2.5,915
C3B-A2-12 C3B-A1-12
BK,2.5,655
AE
Sheet1
BK,2.5,845
Motor-Closing-
Rear door-Left (D512)
Assembly-Door latch-
Rear-Left (D343)
Y
BK,1.5,515
Sheet1
C7PL110-3
VBATT
CLAW SIG
C7PL110-2
BK,0.5,510
C7PK12-4
CLAW
PAWL SIG
C7PL110-4
BK,0.5,510
C7PK12-3
PAWL
GND
C7PL110-6
BK,1.5,290
SP13137
BK,0.5,690
SP8462
BK,0.5,490
C7PK12-5
GND
C37-A2-11 C37-A1-11
BK,0.5,2315
G3D383C-1
BK,2.5,525
C37-A2-12 C37-A1-12
BK,2.5,2315
Motor-Closing-
Rear door-Right (D513)
Assembly-Door latch-
Rear-Right (D342)
AA
BK,1.5,530
Sheet1
C8PL109-3
VBATT
CLAW SIG
C8PL109-2
BK,0.5,510
C8PK11-1
RHS-CLUTCH/LHS-MOTOR-
C8PK11-3
CLAW
PAWL SIG
C8PL109-4
BK,0.5,510
C8PK11-4
PAWL
GND
C8PL109-6
BK,1.5,295
SP8473
BK,0.5,705
SP12703
BK,0.5,490
C8PK11-2
GND
C38-A2-11 C38-A1-11
BK,0.5,1990
G3D375-1
BK,2.5,535
C38-A2-12 C38-A1-12
BK,2.5,1990

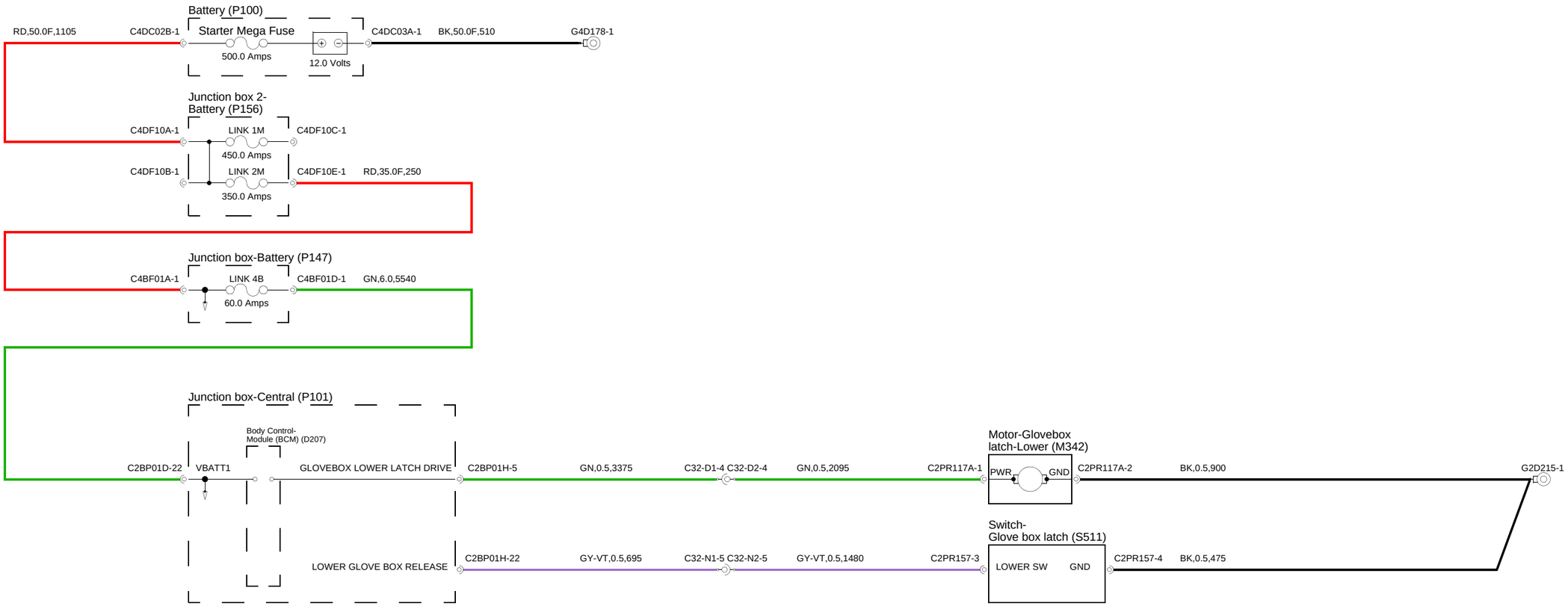
Battery (P100)
RD,50.0F,1105
C4DC02B-1
Starter Mega Fuse
500.0 Amps
12.0 Volts
C4DC03A-1
BK,50.0F,510
G4D178-1
Junction box 2-
Battery (P156)
C4DF10A-1
LINK 1M
450.0 Amps
C4DF10C-1
C4DF10B-1
LINK 2M
350.0 Amps
C4DF10E-1
RD,35.0F,250
Junction box-Battery (P147)
C4BF01A-1
LINK 4B
60.0 Amps
C4BF01D-1
GN,6.0,5540
Junction box-Central (P101)
Body Control-
Module (BCM) (D207)
C2BP01D-22
VBATT1
GLOVEBOX LOWER LATCH DRIVE
C2BP01H-5
GN,0.5,3375
C32-D1-4 C32-D2-4
GN,0.5,2095
C2PR117A-1
Motor-Glovebox
latch-Lower (M342)
PWR
GND
C2PR117A-2
BK,0.5,900
G2D215-1
LOWER GLOVE BOX RELEASE
C2BP01H-22
GY-VT,0.5,695
C32-N1-5 C32-N2-5
GY-VT,0.5,1480
C2PR157-3
Switch-
Glove box latch (S511)
LOWER SW
GND
C2PR157-4
BK,0.5,475

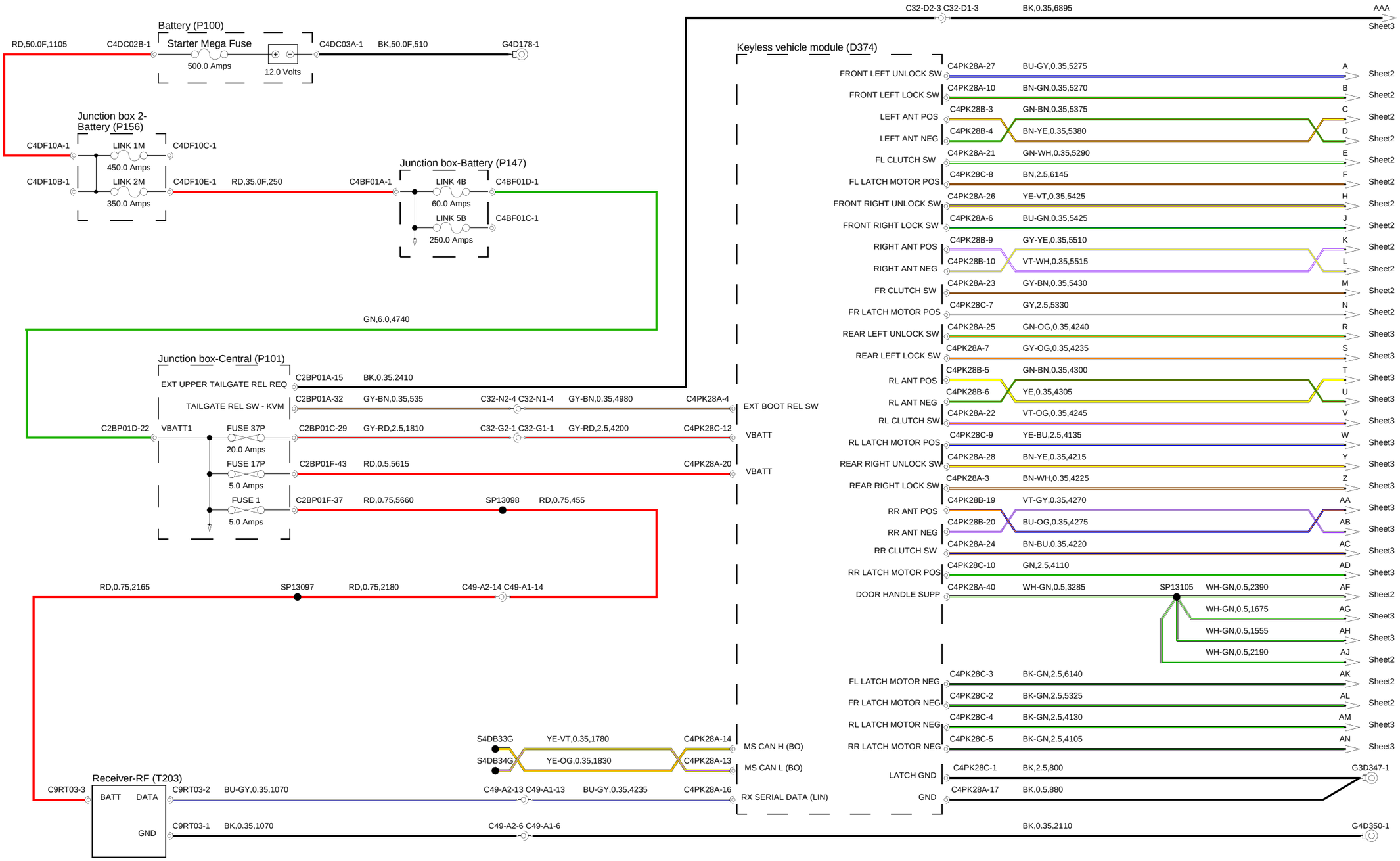
Battery (P100)
Starter Mega Fuse
500.0 Amps
12.0 Volts
RD,50.0F,1105
C4DC02B-1
C4DC03A-1
BK,50.0F,510
G4D178-1
Junction box 2-Battery (P156)
C4DF10A-1
LINK 1M
C4DF10C-1
450.0 Amps
C4DF10B-1
LINK 2M
C4DF10E-1
RD,35.0F,250
350.0 Amps
Junction box-Battery (P147)
C4BF01A-1
LINK 4B
C4BF01D-1
60.0 Amps
LINK 5B
C4BF01C-1
250.0 Amps
GN,6.0,4740
Junction box-Central (P101)
EXT UPPER TAILGATE REL REQ
C2BP01A-15
BK,0.35,2410
TAILGATE REL SW - KVM
C2BP01A-32
GY-BN,0.35,535
C32-N2-4 C32-N1-4
GY-BN,0.35,4980
C4PK28A-4
EXT BOOT REL SW
C2BP01D-22
VBATT1
FUSE 37P
20.0 Amps
C2BP01C-29
GY-RD,2.5,1810
C32-G2-1 C32-G1-1
GY-RD,2.5,4200
C4PK28C-12
VBATT
FUSE 17P
5.0 Amps
C2BP01F-43
RD,0.5,5615
C4PK28A-20
VBATT
FUSE 1
5.0 Amps
C2BP01F-37
RD,0.75,5660
SP13098
RD,0.75,455
RD,0.75,2165
SP13097
RD,0.75,2180
C49-A2-14 C49-A1-14
S4DB33G
YE-VT,0.35,1780
C4PK28A-14
MS CAN H (BO)
S4DB34G
YE-OG,0.35,1830
C4PK28A-13
MS CAN L (BO)
Receiver-RF (T203)
C9RT03-3
BATT
DATA
C9RT03-2
BU-GY,0.35,1070
C49-A2-13 C49-A1-13
BU-GY,0.35,4235
C4PK28A-16
RX SERIAL DATA (LIN)
GND
C9RT03-1
BK,0.35,1070
C49-A2-6 C49-A1-6
BK,0.35,2110
G4D350-1
C32-D2-3 C32-D1-3
BK,0.35,6895
AAA
Sheet3
Keyless vehicle module (D374)
FRONT LEFT UNLOCK SW
C4PK28A-27
BU-GY,0.35,5275
A
Sheet2
FRONT LEFT LOCK SW
C4PK28A-10
BN-GN,0.35,5270
B
Sheet2
LEFT ANT POS
C4PK28B-3
GN-BN,0.35,5375
C
Sheet2
LEFT ANT NEG
C4PK28B-4
BN-YE,0.35,5380
D
Sheet2
FL CLUTCH SW
C4PK28A-21
GN-WH,0.35,5290
E
Sheet2
FL LATCH MOTOR POS
C4PK28C-8
BN,2.5,6145
F
Sheet2
FRONT RIGHT UNLOCK SW
C4PK28A-26
YE-VT,0.35,5425
H
Sheet2
FRONT RIGHT LOCK SW
C4PK28A-6
BU-GN,0.35,5425
J
Sheet2
RIGHT ANT POS
C4PK28B-9
GY-YE,0.35,5510
K
Sheet2
RIGHT ANT NEG
C4PK28B-10
VT-WH,0.35,5515
L
Sheet2
FR CLUTCH SW
C4PK28A-23
GY-BN,0.35,5430
M
Sheet2
FR LATCH MOTOR POS
C4PK28C-7
GY,2.5,5330
N
Sheet2
REAR LEFT UNLOCK SW
C4PK28A-25
GN-OG,0.35,4240
R
Sheet3
REAR LEFT LOCK SW
C4PK28A-7
GY-OG,0.35,4235
S
Sheet3
RL ANT POS
C4PK28B-5
GN-BN,0.35,4300
T
Sheet3
RL ANT NEG
C4PK28B-6
YE,0.35,4305
U
Sheet3
RL CLUTCH SW
C4PK28A-22
VT-OG,0.35,4245
V
Sheet3
RL LATCH MOTOR POS
C4PK28C-9
YE-BU,2.5,4135
W
Sheet3
REAR RIGHT UNLOCK SW
C4PK28A-28
BN-YE,0.35,4215
Y
Sheet3
REAR RIGHT LOCK SW
C4PK28A-3
BN-WH,0.35,4225
Z
Sheet3
RR ANT POS
C4PK28B-19
VT-GY,0.35,4270
AA
Sheet3
RR ANT NEG
C4PK28B-20
BU-OG,0.35,4275
AB
Sheet3
RR CLUTCH SW
C4PK28A-24
BN-BU,0.35,4220
AC
Sheet3
RR LATCH MOTOR POS
C4PK28C-10
GN,2.5,4110
AD
Sheet3
DOOR HANDLE SUPP
C4PK28A-40
WH-GN,0.5,3285
SP13105
WH-GN,0.5,2390
AF
Sheet2
WH-GN,0.5,1675
AG
Sheet3
WH-GN,0.5,1555
AH
Sheet3
WH-GN,0.5,2190
AJ
Sheet2
FL LATCH MOTOR NEG
C4PK28C-3
BK-GN,2.5,6140
AK
Sheet2
FR LATCH MOTOR NEG
C4PK28C-2
BK-GN,2.5,5325
AL
Sheet2
RL LATCH MOTOR NEG
C4PK28C-4
BK-GN,2.5,4130
AM
Sheet3
RR LATCH MOTOR NEG
C4PK28C-5
BK-GN,2.5,4105
AN
Sheet3
LATCH GND
C4PK28C-1
BK,2.5,800
G3D347-1
GND
C4PK28A-17
BK,0.5,880

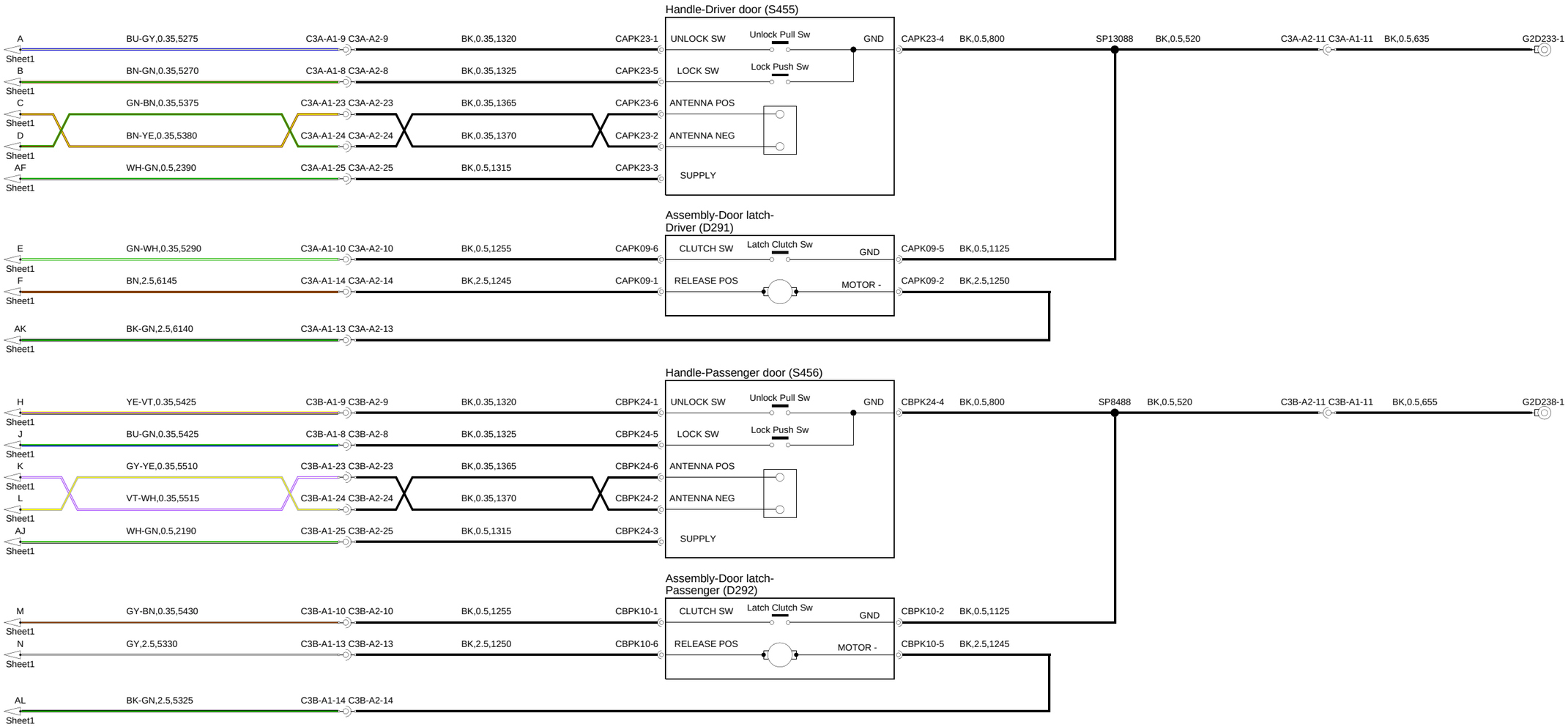
Handle-Driver door (S455)
A
BU-GY,0.35,5275
C3A-A1-9 C3A-A2-9
BK,0.35,1320
CAPK23-1
UNLOCK SW
Unlock Pull Sw
GND
CAPK23-4
BK,0.5,800
SP13088
BK,0.5,520
C3A-A2-11 C3A-A1-11
BK,0.5,635
G2D233-1
B
BN-GN,0.35,5270
C3A-A1-8 C3A-A2-8
BK,0.35,1325
CAPK23-5
LOCK SW
Lock Push Sw
C
GN-BN,0.35,5375
C3A-A1-23 C3A-A2-23
BK,0.35,1365
CAPK23-6
ANTENNA POS
D
BN-YE,0.35,5380
C3A-A1-24 C3A-A2-24
BK,0.35,1370
CAPK23-2
ANTENNA NEG
AF
WH-GN,0.5,2390
C3A-A1-25 C3A-A2-25
BK,0.5,1315
CAPK23-3
SUPPLY
Sheet1
Assembly-Door latch-
Driver (D291)
E
GN-WH,0.35,5290
C3A-A1-10 C3A-A2-10
BK,0.5,1255
CAPK09-6
CLUTCH SW
Latch Clutch Sw
GND
CAPK09-5
BK,0.5,1125
F
BN,2.5,6145
C3A-A1-14 C3A-A2-14
BK,2.5,1245
CAPK09-1
RELEASE POS
MOTOR -
CAPK09-2
BK,2.5,1250
AK
BK-GN,2.5,6140
C3A-A1-13 C3A-A2-13
Handle-Passenger door (S456)
H
YE-VT,0.35,5425
C3B-A1-9 C3B-A2-9
BK,0.35,1320
CBPK24-1
UNLOCK SW
Unlock Pull Sw
GND
CBPK24-4
BK,0.5,800
SP8488
BK,0.5,520
C3B-A2-11 C3B-A1-11
BK,0.5,655
G2D238-1
J
BU-GN,0.35,5425
C3B-A1-8 C3B-A2-8
BK,0.35,1325
CBPK24-5
LOCK SW
Lock Push Sw
K
GY-YE,0.35,5510
C3B-A1-23 C3B-A2-23
BK,0.35,1365
CBPK24-6
ANTENNA POS
L
VT-WH,0.35,5515
C3B-A1-24 C3B-A2-24
BK,0.35,1370
CBPK24-2
ANTENNA NEG
AJ
WH-GN,0.5,2190
C3B-A1-25 C3B-A2-25
BK,0.5,1315
CBPK24-3
SUPPLY
Assembly-Door latch-
Passenger (D292)
M
GY-BN,0.35,5430
C3B-A1-10 C3B-A2-10
BK,0.5,1255
CBPK10-1
CLUTCH SW
Latch Clutch Sw
GND
CBPK10-2
BK,0.5,1125
N
GY,2.5,5330
C3B-A1-13 C3B-A2-13
BK,2.5,1250
CBPK10-6
RELEASE POS
MOTOR -
CBPK10-5
BK,2.5,1245
AL
BK-GN,2.5,5325
C3B-A1-14 C3B-A2-14

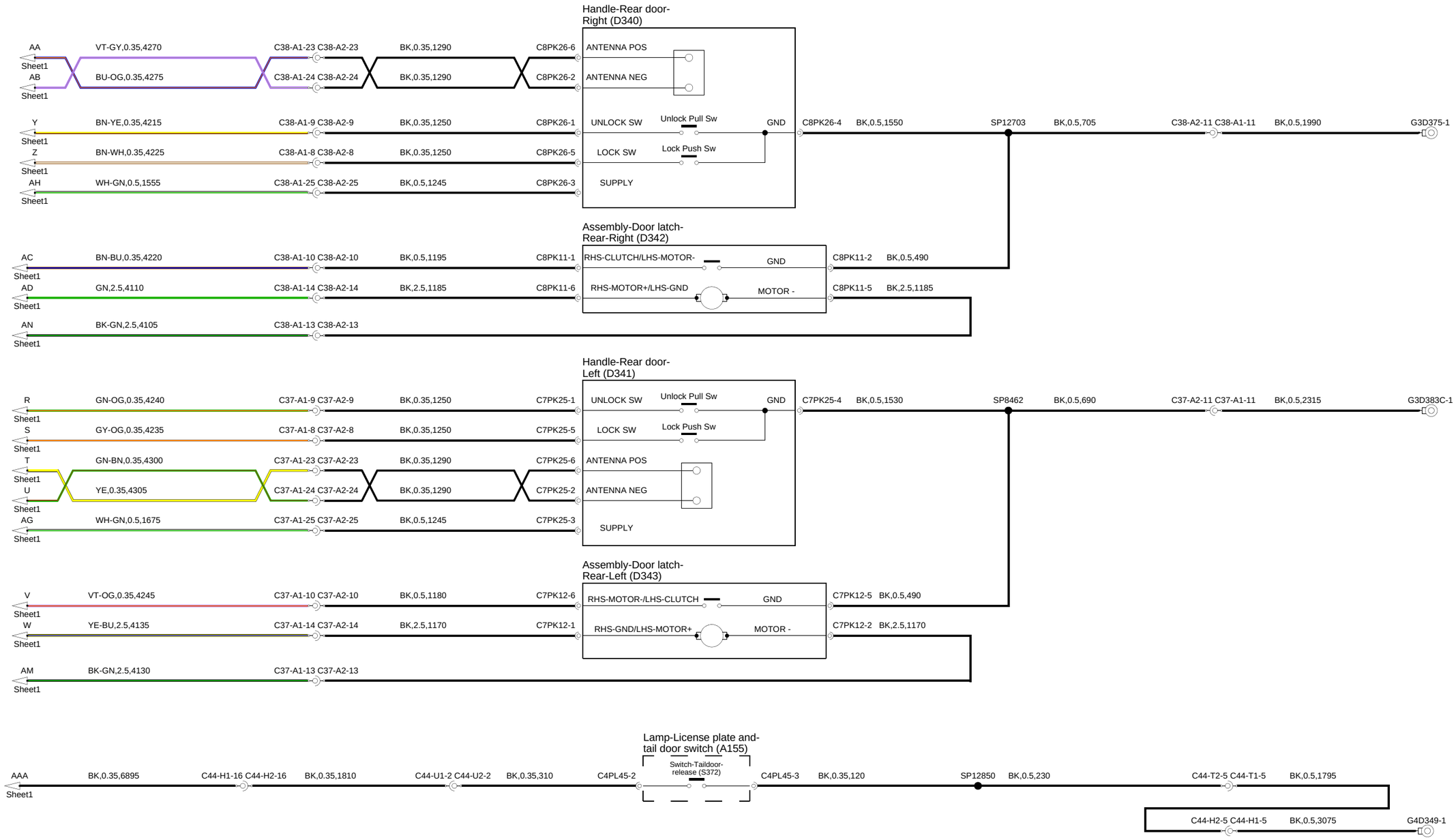
Handle-Rear door-Right (D340)
AA
VT-GY,0.35,4270
C38-A1-23 C38-A2-23
BK,0.35,1290
C8PK26-6
ANTENNA POS
Sheet1
AB
BU-OG,0.35,4275
C38-A1-24 C38-A2-24
BK,0.35,1290
C8PK26-2
ANTENNA NEG
Sheet1
Y
BN-YE,0.35,4215
C38-A1-9 C38-A2-9
BK,0.35,1250
C8PK26-1
UNLOCK SW
Unlock Pull Sw
GND
C8PK26-4
BK,0.5,1550
SP12703
BK,0.5,705
C38-A2-11 C38-A1-11
BK,0.5,1990
G3D375-1
Sheet1
Z
BN-WH,0.35,4225
C38-A1-8 C38-A2-8
BK,0.35,1250
C8PK26-5
LOCK SW
Lock Push Sw
Sheet1
AH
WH-GN,0.5,1555
C38-A1-25 C38-A2-25
BK,0.5,1245
C8PK26-3
SUPPLY
Sheet1
Assembly-Door latch-Rear-Right (D342)
AC
BN-BU,0.35,4220
C38-A1-10 C38-A2-10
BK,0.5,1195
C8PK11-1
RHS-CLUTCH/LHS-MOTOR-
GND
C8PK11-2
BK,0.5,490
Sheet1
AD
GN,2.5,4110
C38-A1-14 C38-A2-14
BK,2.5,1185
C8PK11-6
RHS-MOTOR+/LHS-GND
MOTOR -
C8PK11-5
BK,2.5,1185
Sheet1
AN
BK-GN,2.5,4105
C38-A1-13 C38-A2-13
Sheet1
Handle-Rear door-Left (D341)
R
GN-OG,0.35,4240
C37-A1-9 C37-A2-9
BK,0.35,1250
C7PK25-1
UNLOCK SW
Unlock Pull Sw
GND
C7PK25-4
BK,0.5,1530
SP8462
BK,0.5,690
C37-A2-11 C37-A1-11
BK,0.5,2315
G3D383C-1
Sheet1
S
GY-OG,0.35,4235
C37-A1-8 C37-A2-8
BK,0.35,1250
C7PK25-5
LOCK SW
Lock Push Sw
Sheet1
T
GN-BN,0.35,4300
C37-A1-23 C37-A2-23
BK,0.35,1290
C7PK25-6
ANTENNA POS
Sheet1
U
YE,0.35,4305
C37-A1-24 C37-A2-24
BK,0.35,1290
C7PK25-2
ANTENNA NEG
Sheet1
AG
WH-GN,0.5,1675
C37-A1-25 C37-A2-25
BK,0.5,1245
C7PK25-3
SUPPLY
Sheet1
Assembly-Door latch-Rear-Left (D343)
V
VT-OG,0.35,4245
C37-A1-10 C37-A2-10
BK,0.5,1180
C7PK12-6
RHS-MOTOR-/LHS-CLUTCH
GND
C7PK12-5
BK,0.5,490
Sheet1
W
YE-BU,2.5,4135
C37-A1-14 C37-A2-14
BK,2.5,1170
C7PK12-1
RHS-GND/LHS-MOTOR+
MOTOR -
C7PK12-2
BK,2.5,1170
Sheet1
AM
BK-GN,2.5,4130
C37-A1-13 C37-A2-13
Sheet1
Lamp-License plate and-tail door switch (A155)
AAA
BK,0.35,6895
C44-H1-16 C44-H2-16
BK,0.35,1810
C44-U1-2 C44-U2-2
BK,0.35,310
C4PL45-2
Switch-Taildoor-release (S372)
C4PL45-3
BK,0.35,120
SP12850
BK,0.5,230
C44-T2-5 C44-T1-5
BK,0.5,1795
Sheet1
C44-H2-5 C44-H1-5
BK,0.5,3075
G4D349-1

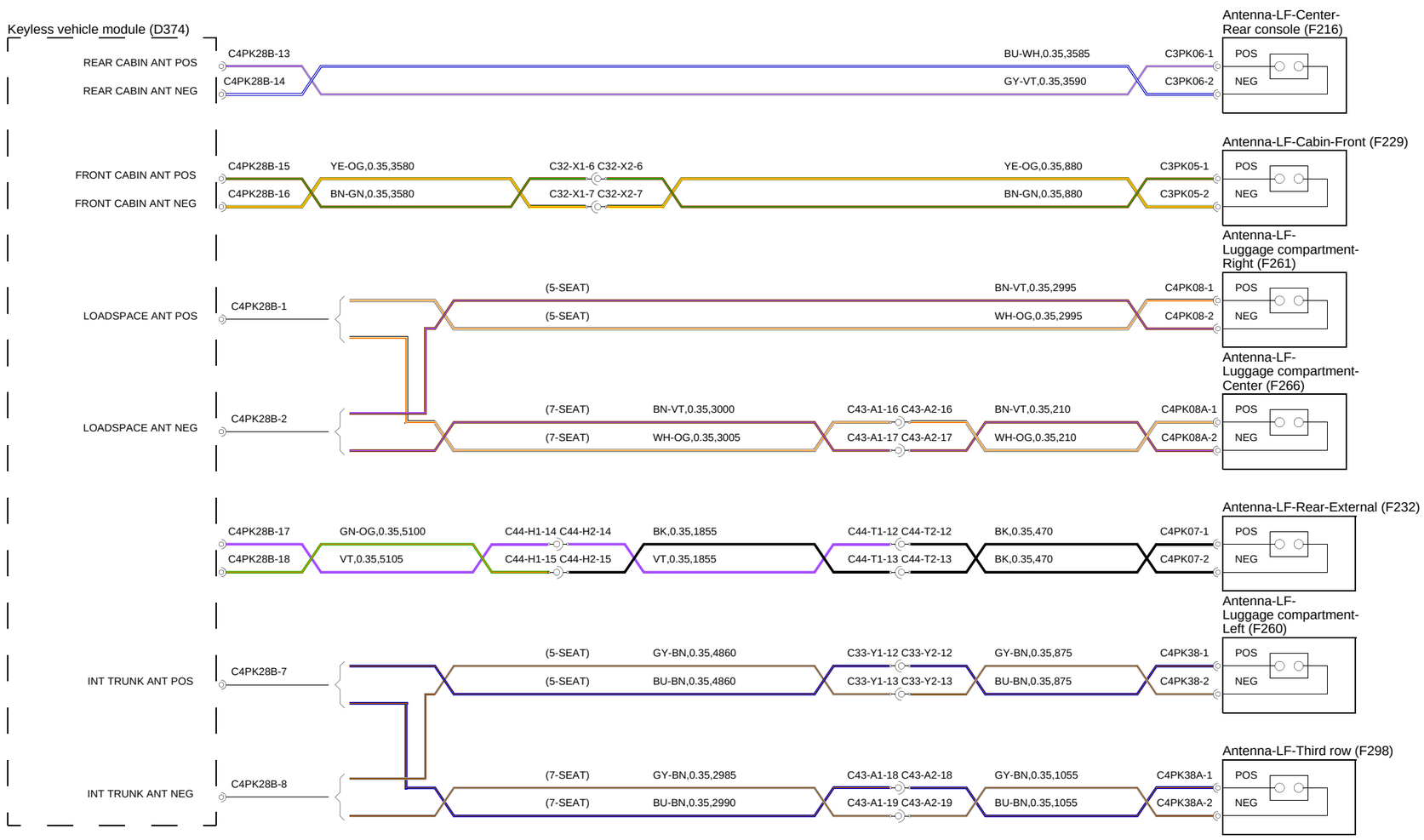
Keyless vehicle module (D374)
REAR CABIN ANT POS
REAR CABIN ANT NEG
C4PK28B-13
C4PK28B-14
BU-WH,0.35,3585
GY-VT,0.35,3590
C3PK06-1
C3PK06-2
Antenna-LF-Center-Rear console (F216)
POS
NEG
FRONT CABIN ANT POS
FRONT CABIN ANT NEG
C4PK28B-15
C4PK28B-16
YE-OG,0.35,3580
BN-GN,0.35,3580
C32-X1-6 C32-X2-6
C32-X1-7 C32-X2-7
YE-OG,0.35,880
BN-GN,0.35,880
C3PK05-1
C3PK05-2
Antenna-LF-Cabin-Front (F229)
POS
NEG
LOADSPACE ANT POS
C4PK28B-1
(5-SEAT)
(5-SEAT)
BN-VT,0.35,2995
WH-OG,0.35,2995
C4PK08-1
C4PK08-2
Antenna-LF-Luggage compartment-Right (F261)
POS
NEG
LOADSPACE ANT NEG
C4PK28B-2
(7-SEAT)
(7-SEAT)
BN-VT,0.35,3000
WH-OG,0.35,3005
C43-A1-16 C43-A2-16
C43-A1-17 C43-A2-17
BN-VT,0.35,210
WH-OG,0.35,210
C4PK08A-1
C4PK08A-2
Antenna-LF-Luggage compartment-Center (F266)
POS
NEG
C4PK28B-17
C4PK28B-18
GN-OG,0.35,5100
VT,0.35,5105
C44-H1-14 C44-H2-14
C44-H1-15 C44-H2-15
BK,0.35,1855
VT,0.35,1855
C44-T1-12 C44-T2-12
C44-T1-13 C44-T2-13
BK,0.35,470
BK,0.35,470
C4PK07-1
C4PK07-2
Antenna-LF-Rear-External (F232)
POS
NEG
INT TRUNK ANT POS
C4PK28B-7
(5-SEAT)
(5-SEAT)
GY-BN,0.35,4860
BU-BN,0.35,4860
C33-Y1-12 C33-Y2-12
C33-Y1-13 C33-Y2-13
GY-BN,0.35,875
BU-BN,0.35,875
C4PK38-1
C4PK38-2
Antenna-LF-Luggage compartment-Left (F260)
POS
NEG
INT TRUNK ANT NEG
C4PK28B-8
(7-SEAT)
(7-SEAT)
GY-BN,0.35,2985
BU-BN,0.35,2990
C43-A1-18 C43-A2-18
C43-A1-19 C43-A2-19
GY-BN,0.35,1055
BU-BN,0.35,1055
C4PK38A-1
C4PK38A-2
Antenna-LF-Third row (F298)
POS
NEG

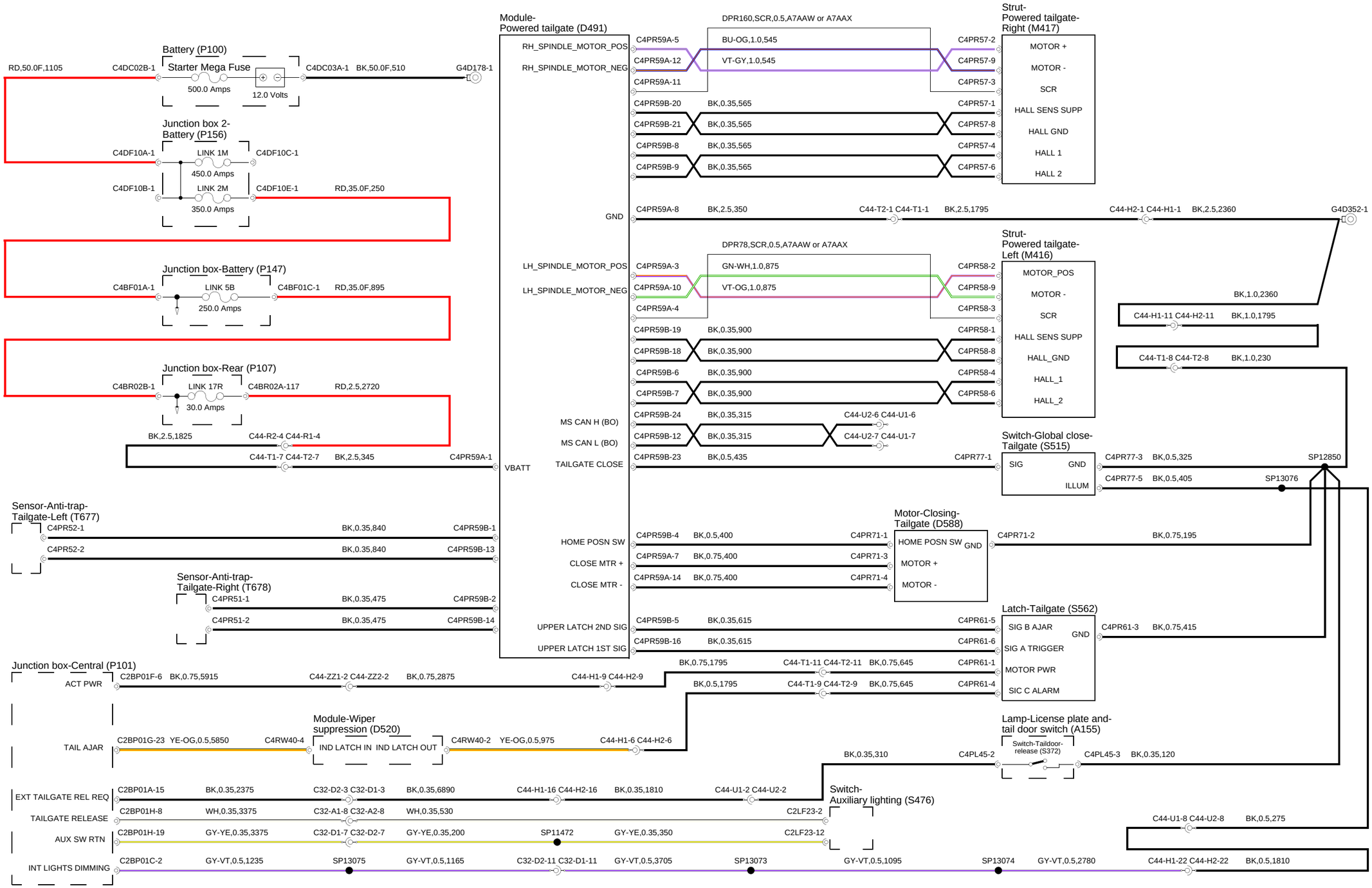
Battery (P100)
Starter Mega Fuse
500.0 Amps
12.0 Volts
RD,50.0F,1105
C4DC02B-1
C4DC03A-1
BK,50.0F,510
G4D178-1
Junction box 2-Battery (P156)
C4DF10A-1
LINK 1M
C4DF10C-1
450.0 Amps
C4DF10B-1
LINK 2M
C4DF10E-1
RD,35.0F,250
350.0 Amps
Junction box-Battery (P147)
C4BF01A-1
LINK 5B
C4BF01C-1
RD,35.0F,895
250.0 Amps
Junction box-Rear (P107)
C4BR02B-1
LINK 17R
C4BR02A-117
RD,2.5,2720
30.0 Amps
BK,2.5,1825
C44-R2-4 C44-R1-4
C44-T1-7 C44-T2-7
BK,2.5,345
C4PR59A-1
Module-Powered tailgate (D491)
RH_SPINDLE_MOTOR_POS
RH_SPINDLE_MOTOR_NEG
GND
LH_SPINDLE_MOTOR_POS
LH_SPINDLE_MOTOR_NEG
MS CAN H (BO)
MS CAN L (BO)
VBATT
TAILGATE CLOSE
HOME POSN SW
CLOSE MTR +
CLOSE MTR -
UPPER LATCH 2ND SIG
UPPER LATCH 1ST SIG
DPR160,SCR,0.5,A7AAW or A7AAX
C4PR59A-5
BU-OG,1.0,545
C4PR59A-12
VT-GY,1.0,545
C4PR59A-11
C4PR59B-20
BK,0.35,565
C4PR59B-21
C4PR59B-8
C4PR59B-9
C4PR59A-8
BK,2.5,350
C44-T2-1 C44-T1-1
BK,2.5,1795
C44-H2-1 C44-H1-1
BK,2.5,2360
G4D352-1
DPR78,SCR,0.5,A7AAW or A7AAX
C4PR59A-3
GN-WH,1.0,875
C4PR59A-10
VT-OG,1.0,875
C4PR59A-4
C4PR59B-19
BK,0.35,900
C4PR59B-18
C4PR59B-6
C4PR59B-7
C4PR59B-24
BK,0.35,315
C44-U2-6 C44-U1-6
C4PR59B-12
C44-U2-7 C44-U1-7
C4PR59B-23
BK,0.5,435
Strut-Powered tailgate-Right (M417)
MOTOR +
MOTOR -
SCR
HALL SENS SUPP
HALL GND
HALL 1
HALL 2
C4PR57-2
C4PR57-9
C4PR57-3
C4PR57-1
C4PR57-8
C4PR57-4
C4PR57-6
Strut-Powered tailgate-Left (M416)
MOTOR_POS
MOTOR -
SCR
HALL SENS SUPP
HALL_GND
HALL_1
HALL_2
C4PR58-2
C4PR58-9
C4PR58-3
C4PR58-1
C4PR58-8
C4PR58-4
C4PR58-6
BK,1.0,2360
C44-H1-11 C44-H2-11
BK,1.0,1795
C44-T1-8 C44-T2-8
BK,1.0,230
Switch-Global close-Tailgate (S515)
SIG
GND
ILLUM
C4PR77-1
C4PR77-3
BK,0.5,325
SP12850
C4PR77-5
BK,0.5,405
SP13076
Sensor-Anti-trap-Tailgate-Left (T677)
C4PR52-1
BK,0.35,840
C4PR59B-1
C4PR52-2
C4PR59B-13
Sensor-Anti-trap-Tailgate-Right (T678)
C4PR51-1
BK,0.35,475
C4PR59B-2
C4PR51-2
C4PR59B-14
C4PR59B-4
BK,0.5,400
C4PR71-1
C4PR59A-7
BK,0.75,400
C4PR71-3
C4PR59A-14
BK,0.75,400
C4PR71-4
Motor-Closing-Tailgate (D588)
HOME POSN SW
GND
MOTOR +
MOTOR -
C4PR71-2
BK,0.75,195
C4PR59B-5
BK,0.35,615
C4PR61-5
C4PR59B-16
C4PR61-6
Latch-Tailgate (S562)
SIG B AJAR
SIG A TRIGGER
MOTOR PWR
SIC C ALARM
C4PR61-1
C4PR61-4
C4PR61-3
BK,0.75,415
Junction box-Central (P101)
ACT PWR
C2BP01F-6
BK,0.75,5915
C44-ZZ1-2 C44-ZZ2-2
BK,0.75,2875
C44-H1-9 C44-H2-9
BK,0.75,1795
C44-T1-11 C44-T2-11
BK,0.75,645
BK,0.5,1795
C44-T1-9 C44-T2-9
TAIL AJAR
C2BP01G-23
YE-OG,0.5,5850
C4RW40-4
Module-Wiper suppression (D520)
IND LATCH IN
IND LATCH OUT
C4RW40-2
YE-OG,0.5,975
C44-H1-6 C44-H2-6
Lamp-License plate and-tail door switch (A155)
Switch-Taildoor-release (S372)
BK,0.35,310
C4PL45-2
C4PL45-3
BK,0.35,120
EXT TAILGATE REL REQ
C2BP01A-15
BK,0.35,2375
C32-D2-3 C32-D1-3
BK,0.35,6890
C44-H1-16 C44-H2-16
BK,0.35,1810
C44-U1-2 C44-U2-2
TAILGATE RELEASE
C2BP01H-8
WH,0.35,3375
C32-A1-8 C32-A2-8
WH,0.35,530
C2LF23-2
Switch-Auxiliary lighting (S476)
AUX SW RTN
C2BP01H-19
GY-YE,0.35,3375
C32-D1-7 C32-D2-7
GY-YE,0.35,200
SP11472
GY-YE,0.35,350
C2LF23-12
C44-U1-8 C44-U2-8
BK,0.5,275
INT LIGHTS DIMMING
C2BP01C-2
GY-VT,0.5,1235
SP13075
GY-VT,0.5,1165
C32-D2-11 C32-D1-11
GY-VT,0.5,3705
SP13073
GY-VT,0.5,1095
SP13074
GY-VT,0.5,2780
C44-H1-22 C44-H2-22
BK,0.5,1810